VC_3401 SOT-23

P-Enhancement Field Effect Transistor

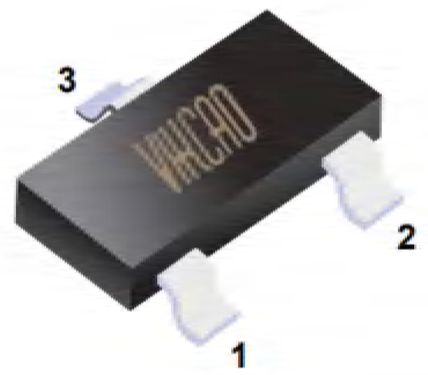

1. Gate
2. Source
3. Drain

Features

- High density cell design for ultra low $R_{DS(ON)}$
- Fully characterized avalanche voltage and current
- Excellent package for good heat dissipation

Simplified outline(SOT-23)

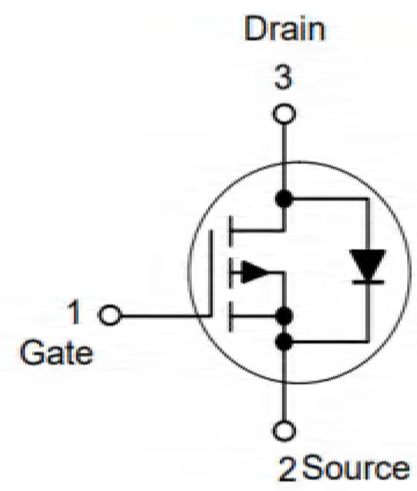

Applications

- Power switching application
- Hard switched and high frequency circuits
- Uninterruptible power supply

Absolute Maximum Ratings Ta = 25℃

Parameter	Symbol	Value	Units
Drain-Source Voltage	$-V_{DS}$	30	V
Gate-Source Voltage	V_{GS}	±12	V
Continuous Drain Current	$-I_D$	4.2	A
Power Dissipation	P_D	1.2	W
Junction and Storage Temperature Range	T_J, T_{STG}	150, -55 to 150	°C
Thermal Characteristics			
Parameter	**Symbol**	**Typ.**	**Units**
Maximum Junction-to-Ambient	$R_{\theta JA}$	104	°C/W

■ Electrical Characteristics Ta = 25℃

Parameter	Symbol	Test Condition	Min.	Typ.	Max.	Units
Static Characteristics						
Drain-source breakdown voltage	$-V_{(BR)DSS}$	V_{GS} = 0V, I_D=-250μA	30	--	--	V
Drain to Source Leakage Current	$-I_{DSS}$	V_{DS} =-24V,V_{GS} = 0V	--	--	1	μA
Gate-body leakage current	I_{GSS}	V_{GS} =±12V, V_{DS} = 0V	--	--	±100	nA
Gate threshold voltage Note1	$-V_{GS(th)}$	V_{DS} =V_{GS}, I_D =-250μA	0.7	--	1.3	V
Drain-source on-resistance Note1	$R_{DS(on)}$	V_{GS} =-10V, I_D =-4.1A	--	--	65	mΩ
		V_{GS} =-4.5V, I_D =-2A	--	--	85	mΩ
Forward transconductance Note1	g_{FS}	V_{DS} =-5V, I_D =-5A	7	--	--	S
Dynamic characteristics						
Input Capacitance	C_{iss}	V_{DS} = -15V,V_{GS} = 0V,f=1MHz	--	954	--	pF
Output Capacitance	C_{oss}		--	115	--	
Reverse Transfer Capacitance	C_{rss}		--	77	--	
Switching Characteristics						
Turn-on delay time	$t_{d(on)}$	V_{DD}=-15V, V_{GS}=-10V， R_{GEN} =6Ω, R_L =3.6Ω,	--	--	6.3	ns
Turn-on rise time	t_r		--	--	3.2	
Turn-off delay time	$t_{d(off)}$		--	--	38.2	
Turn-off fall time	t_f		--	--	12	
Source-Drain Diode characteristics						
Diode Forward voltage	$-V_{DS}$	V_{GS} =0V, I_S=-1A	--	--	1	V

Notes: 1. Pulse test ; pulse width ≤300μs, duty cycle ≤2%.

■ Schottky Diodes

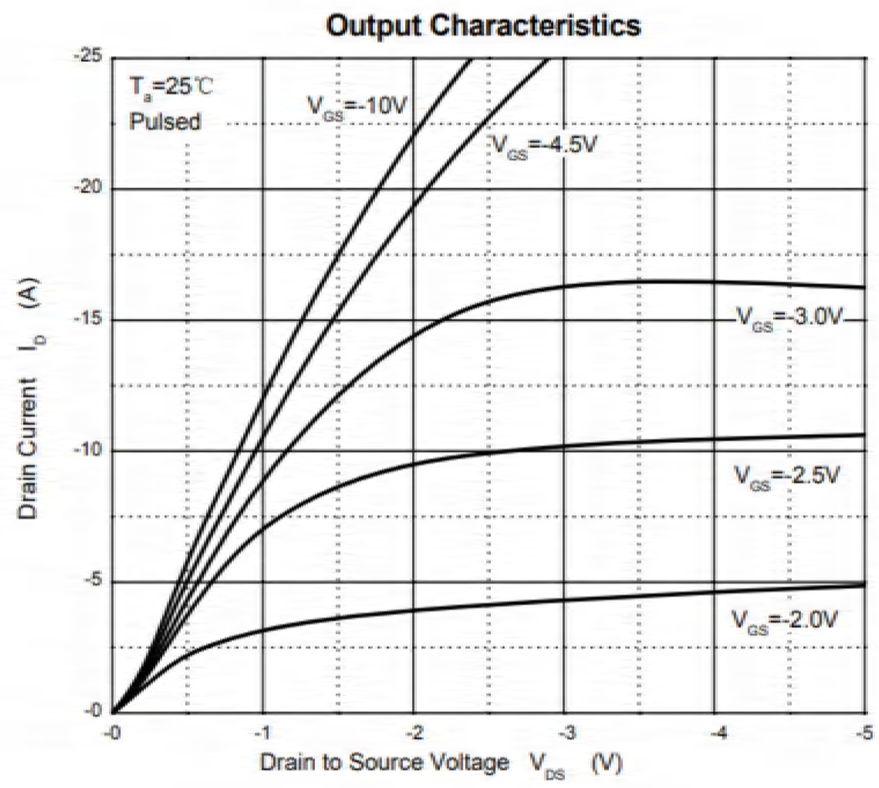

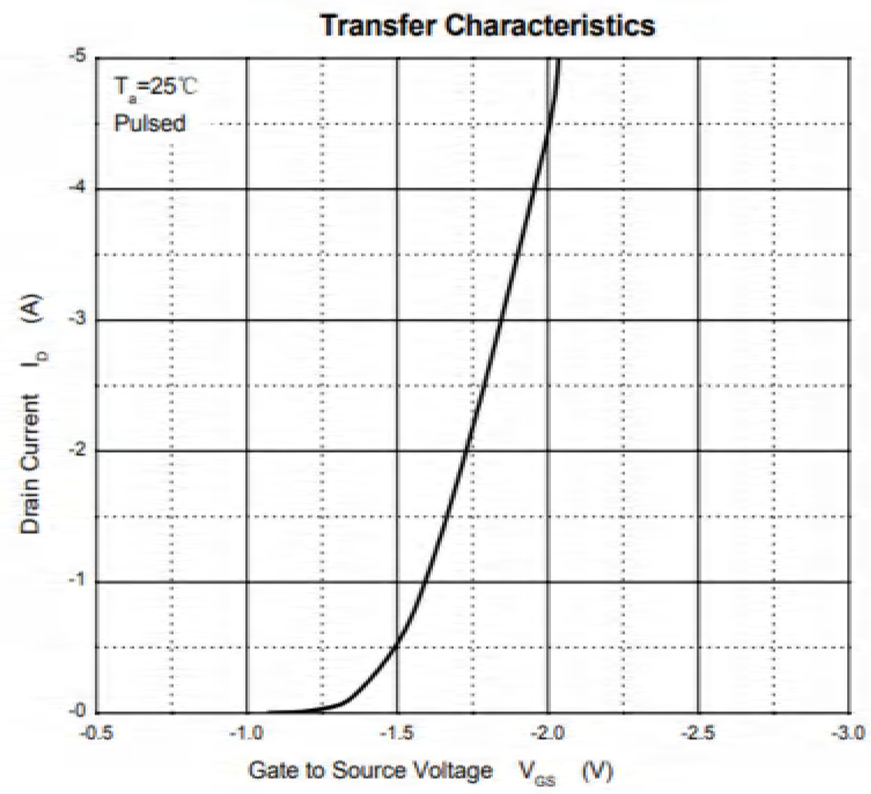

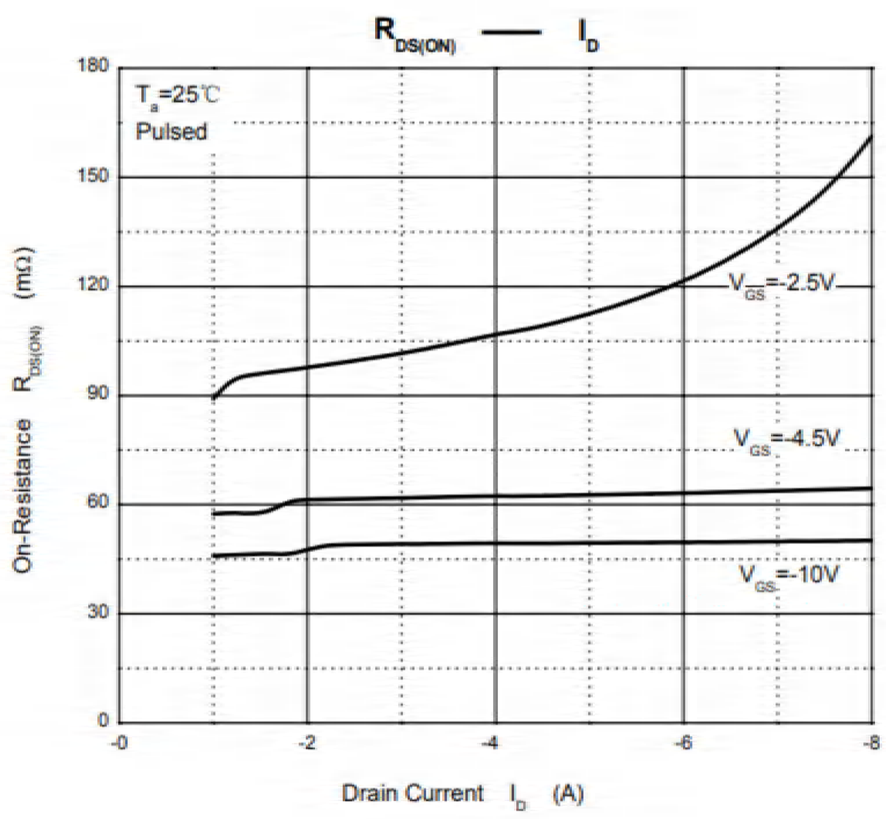

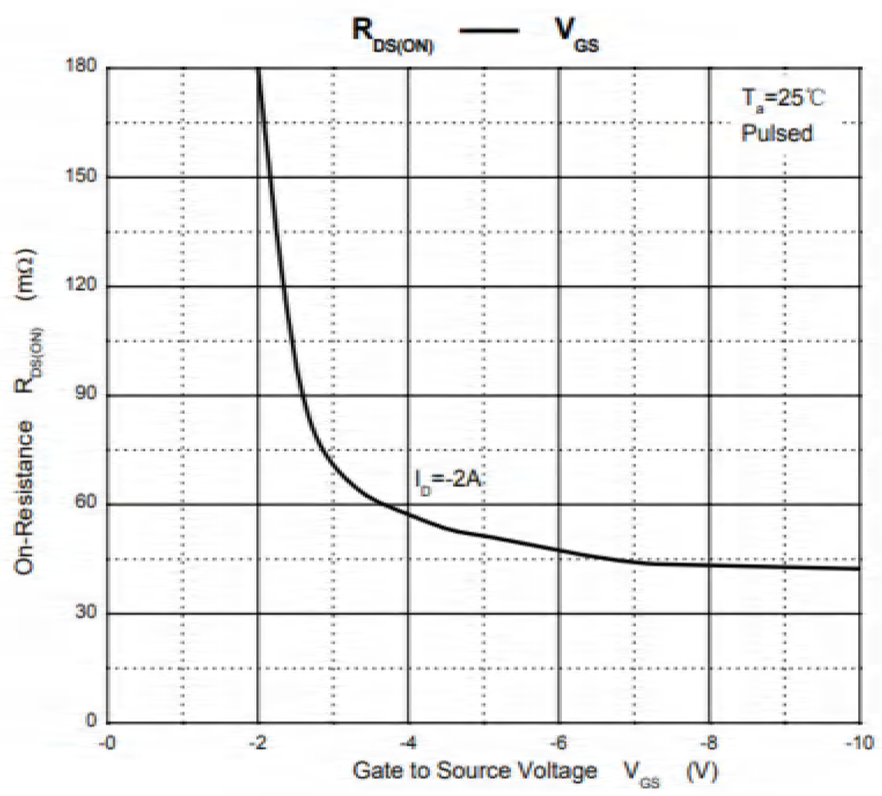

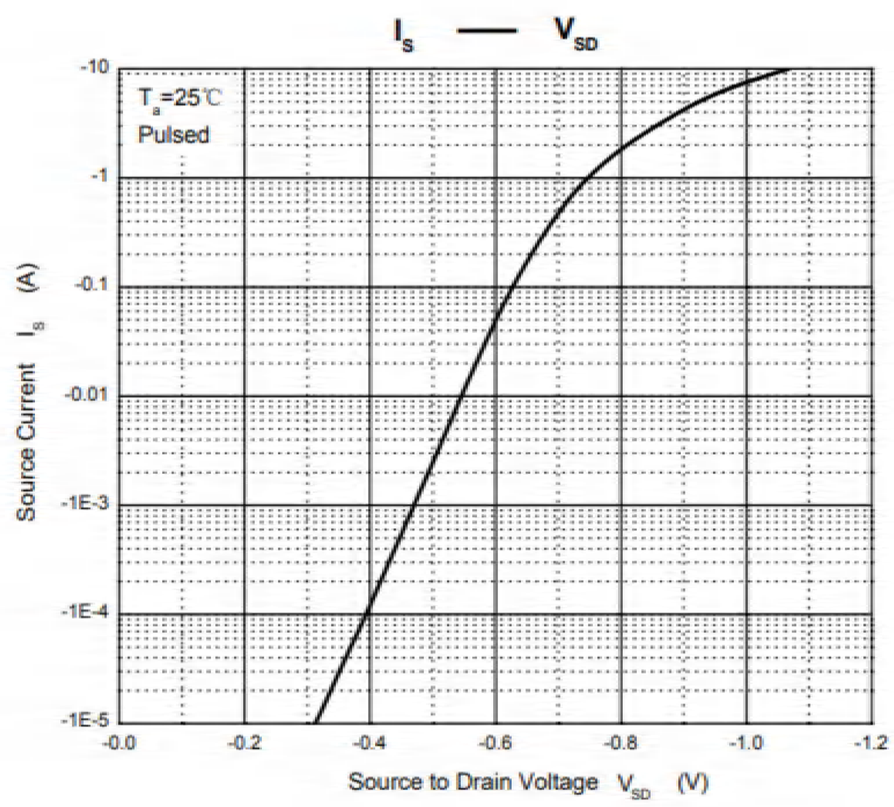

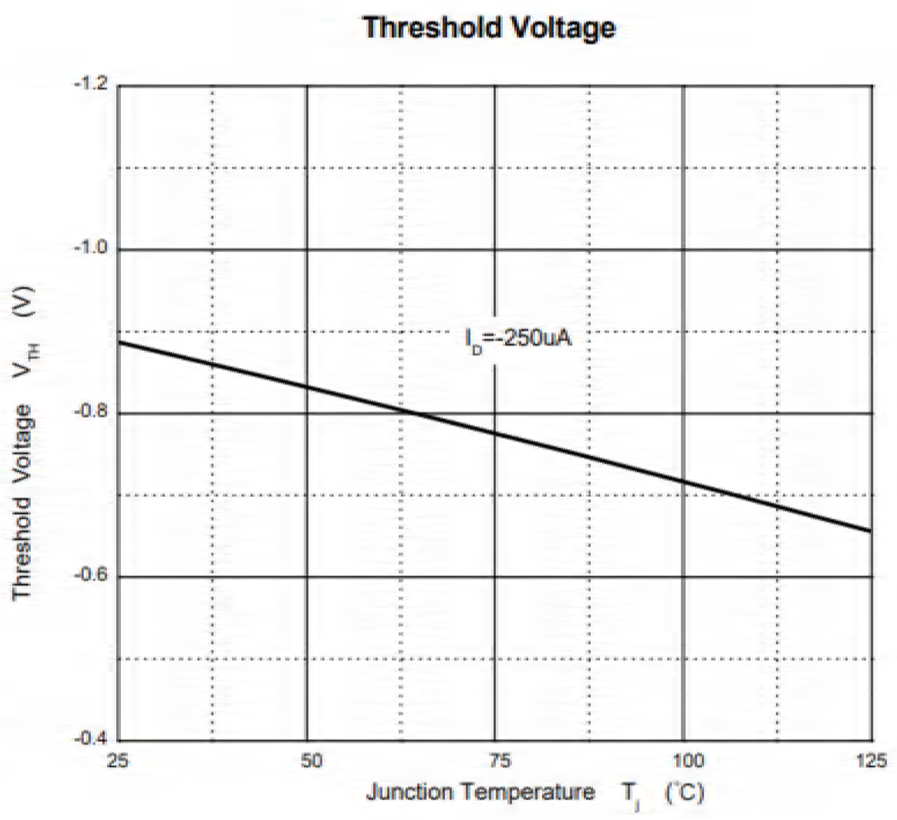

SOT-23

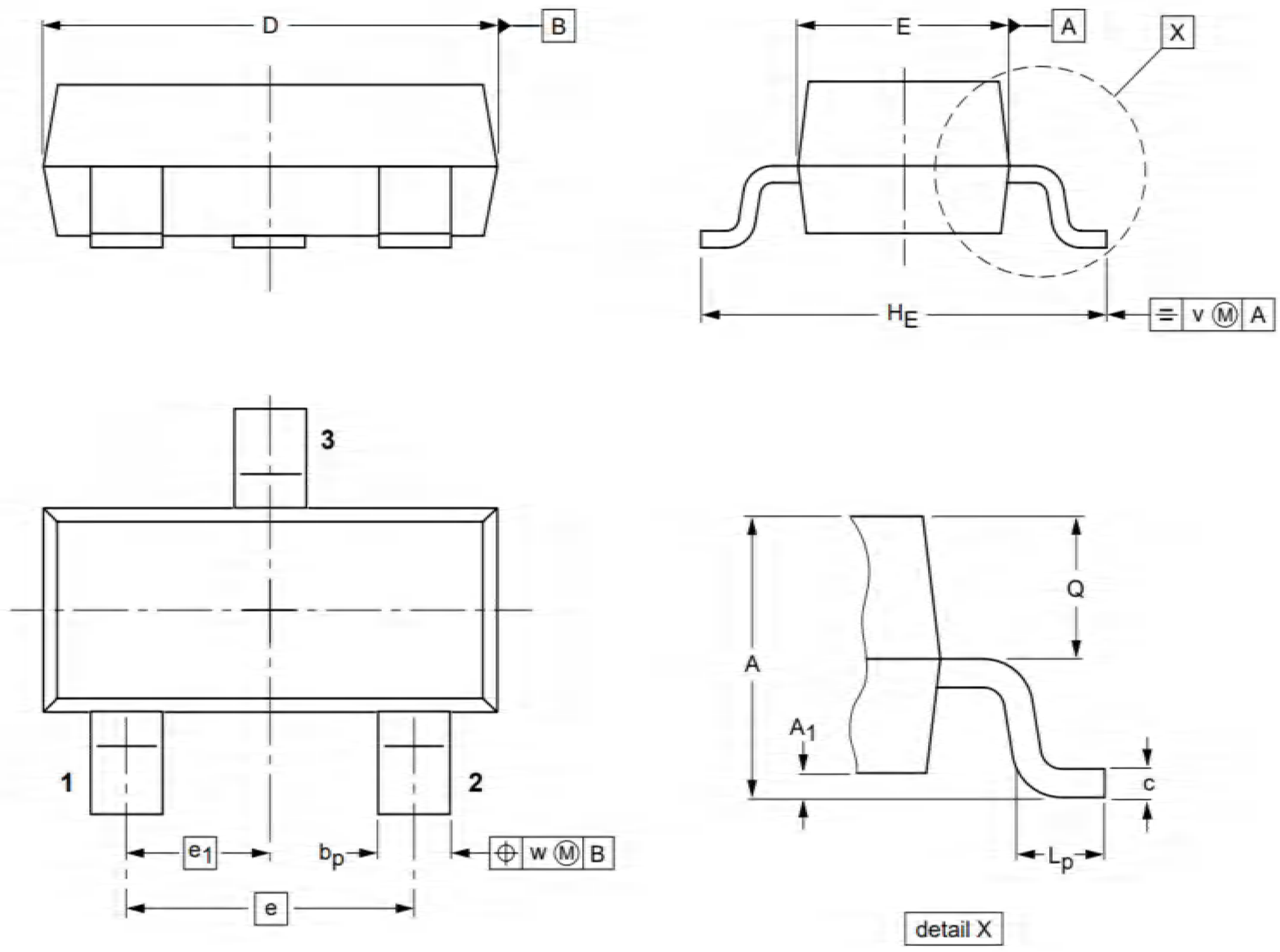

DIMENSIONS (mm are the original dimensions)

UNIT	A	A_1 max.	b_p	c	D	E	e	e_1	H_E	L_p	Q	v	w
mm	1.1 0.9	0.1	0.48 0.38	0.15 0.09	3.0 2.8	1.4 1.2	1.9	0.95	2.5 2.1	0.45 0.15	0.55 0.45	0.2	0.1